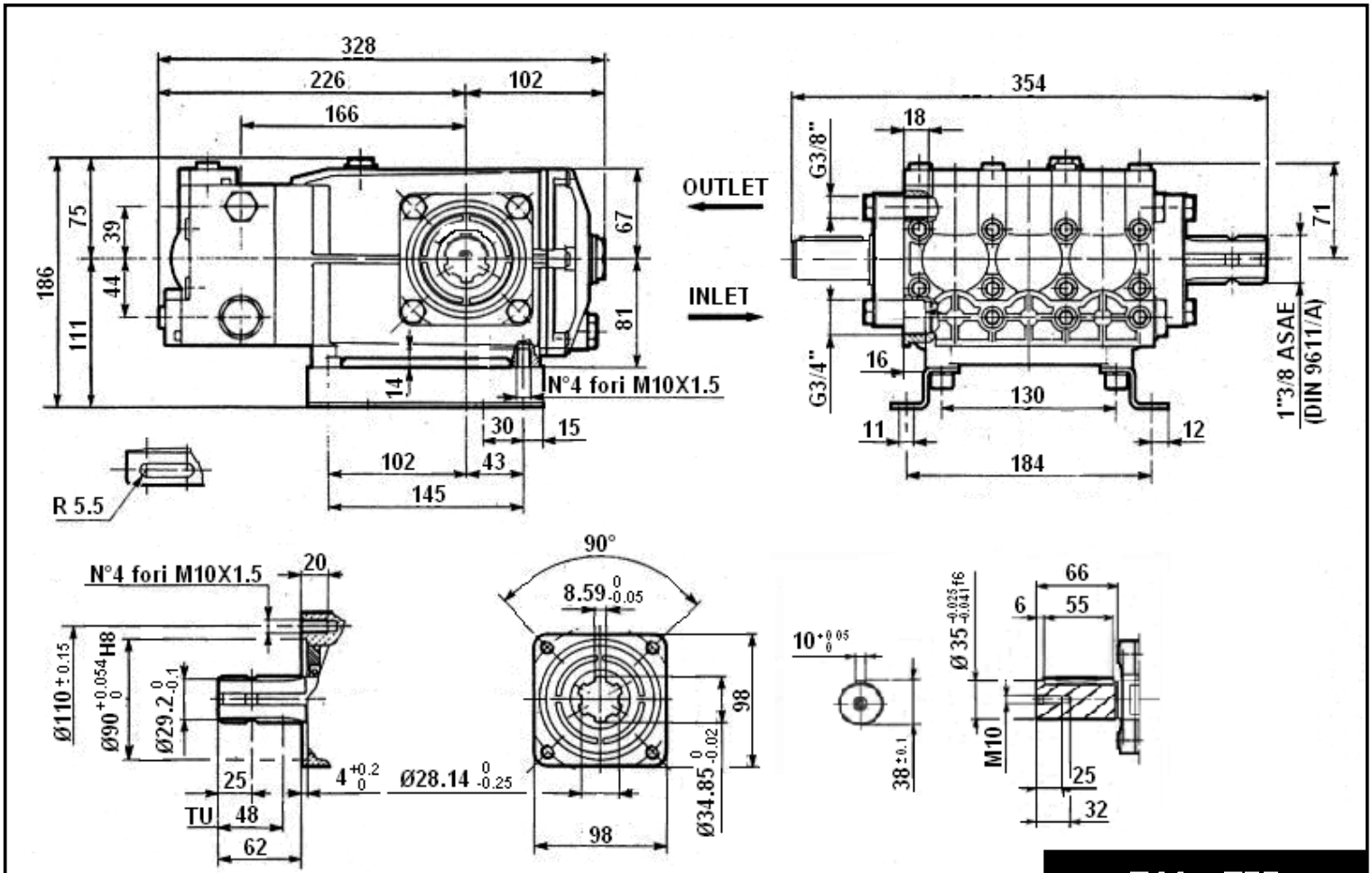
328
226
102
166
354
18
G3/8"
OUTLET
INLET
71
75
39
44
186
111
67
81
14
N°4 fori M10X1.5
30
15
102
43
145
R 5.5
G3/4"
16
130
11
12
184
1"3/8 ASAE
(DIN 9611/A)
N°4 fori M10X1.5
20
90°
8.59 0 -0.05
Ø110 ± 0.15
Ø90 +0.054 0 H8
Ø29.2 0 -0.1
25
4 +0.2 0
TU
48
62
Ø28.14 0 -0.25
98
Ø34.85 0 -0.02
98
10 +0.05 0
38 ± 0.1
Ø 35 -0.025 -0.041 f6
66
6
55
M10
25
32

T44 – T55